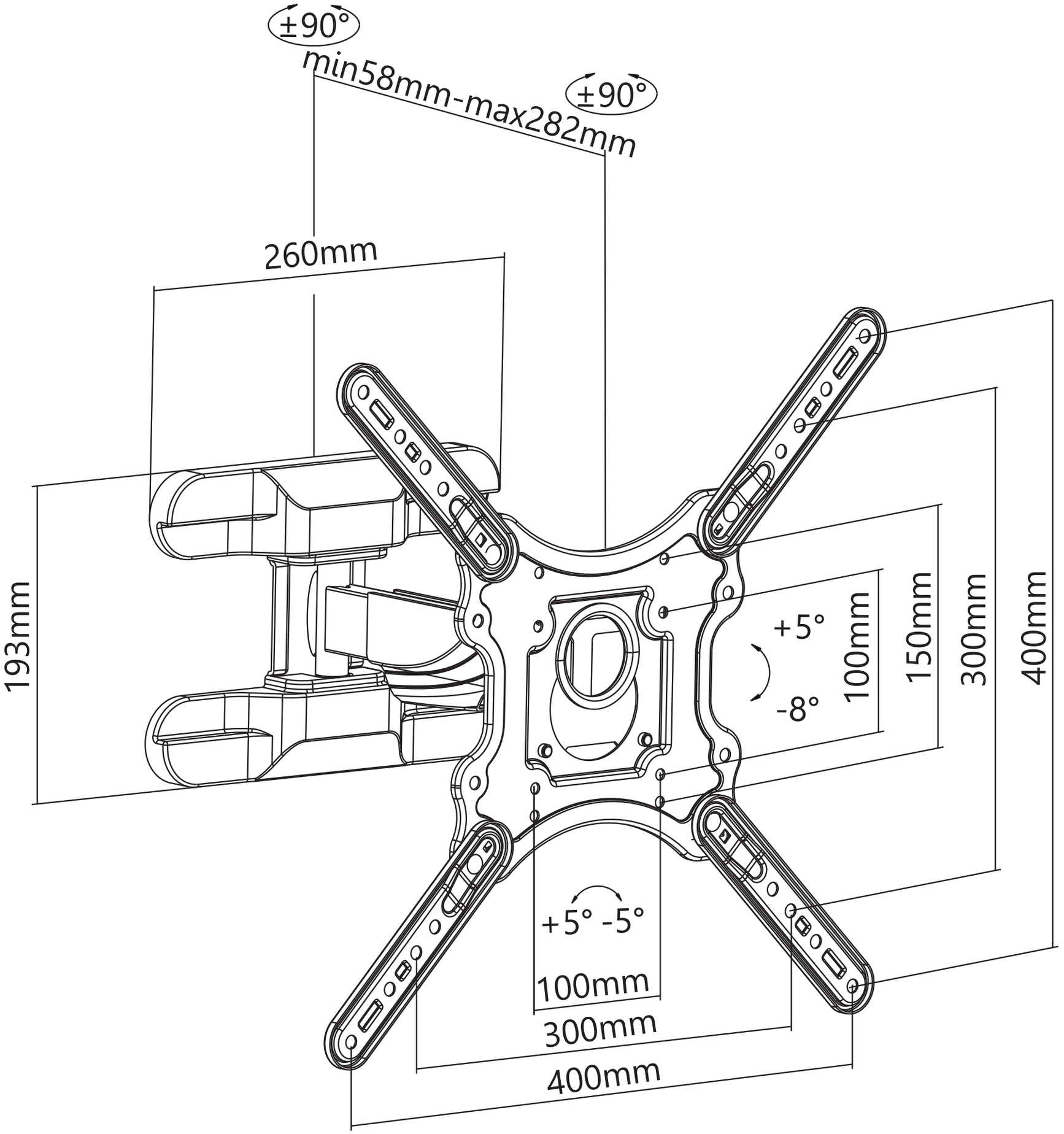
±90°
min58mm-max282mm
±90°
260mm
193mm
+5°
-8°
100mm
150mm
300mm
400mm
+5° -5°
100mm
300mm
400mm